# JODON INCORPORATED

## Louver Angle Measurement System | Model: LAC-2000

### Fin Types

- Convoluted Louvered Fin
- Flat Louvered Fin

### Measurements and Results

- Louver Angle
- % Bulk Transmission

### Fixtures and Calibration Blocks

In order to run different fin designs on the LAC, new Fixtures must be made to hold each unique fin sample. Jodon engineers custom design and manufacture a Fixture and Calibration Block for each of our customer's production samples. The Calibration Block is designed in order to calibrate the LAC with each test to maintain its accuracy.

With each Fixture and Calibration Block produced, Jodon includes the customized test for that fin as well. This allows the operators to begin running tests immediately without any downtime for writing or fine tuning test parameters.


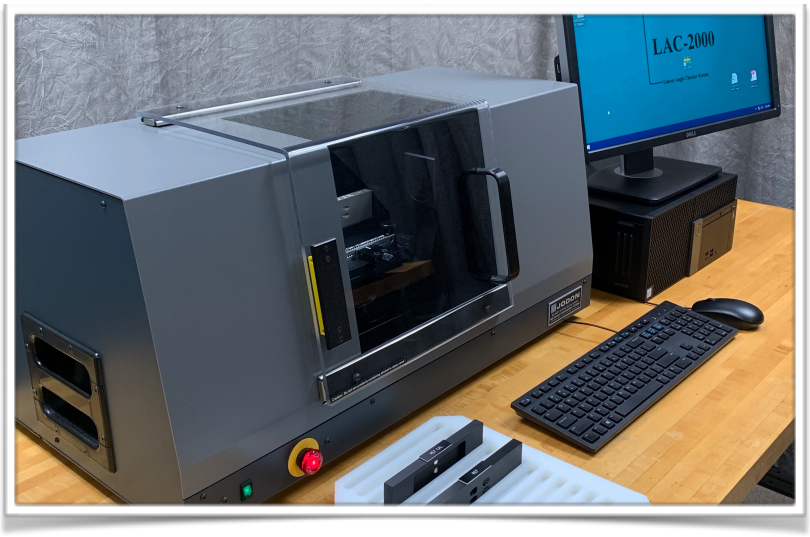


# About the LAC

The Jodon Louver Angle Measurement System, Model LAC-2000, is a standalone, offline system for measuring louver features of convolution (serpentine) and plate types cooling fins. Defects in fin fabricating tooling and fin machine alignment can be easily identified and analyzed using this system.

Long-term degradation in fin machine rolls (or dies), caused by age or misalignment, can be tracked using the "percent bulk transmission" feature. Daily use of the LAC-2000 permits operators to determine when adjustments or changes should be made in order to ensure continued production of conforming louvered fin components.

A single LAC system can be used to qualify one, or dozens of production fin mills. Dedicated fin holding fixtures, and preprogrammed instructions and computer routines ensure simplicity of operation and preciseness of measurements.

The LAC-2000 saves measurement results for presentation of text reports, and for use in Statistical Process Control (SPC) analysis and graphical presentation. Accordingly, current or historical fin production can be viewed within the LAC program.

## Specifications

- **System Type:** Non-contact electro-optical angular measurement instrument
- **Parameters Measured:** Louver angle, % Bulk Transmission
- **Measurement Accuracy:**
  - **Louver Angle:** within 0.5 degrees
  - **%BT:** with 5.0%
- **Light Source:** Eye-safe, LED, non-coherent
- **Operating Wavelength:** 880nm
- **LED Optical Power Output:** Nil
- **Stage Resolution:** 0.01°
- **Steps per Revolution:** 36,000
- **Stepper Speed, Nominal:** 500sps
- **Data Acquisition:** 12-bit, multi-range
- **Computer (Minimum):**
  - **CPU:** Dell Optiplex
  - **RAM:** 4 GB
  - **HDD:** 500 GB
  - **Backup:** USB Flash Drive
  - **Monitor:** 24" LCD
  - **Enclosure:** Mid-Tower

## *Percent Bulk Transmission (%BT)*

When performing measurements, the LAC-2000 compares the amplitude of light passing through each louvered window at the angle of maximum intensity to the light amplitude which would pass though the louvered window if the panel was formed exactly to print. This ratio is called Percent Bulk Transmission (%BT). With increasing wear or misalignment of the fin tooling, the %BT measurements will drop as well.

## *Statistical Process Control (SPC)*

Statistical Process Control (SPC) is a method of quality control which employs statistical methods to monitor and control a process. This helps to ensure that the process operates efficiently and produces more specification-conforming products with less waste.

The LAC-2000 software stores test results for use in text reports and SPC analysis and presentations. SPC data can be viewed for Louver Angle as well as % Bulk Transmission in the form of Control Charts, Trend Charts, and a variety of Histograms.

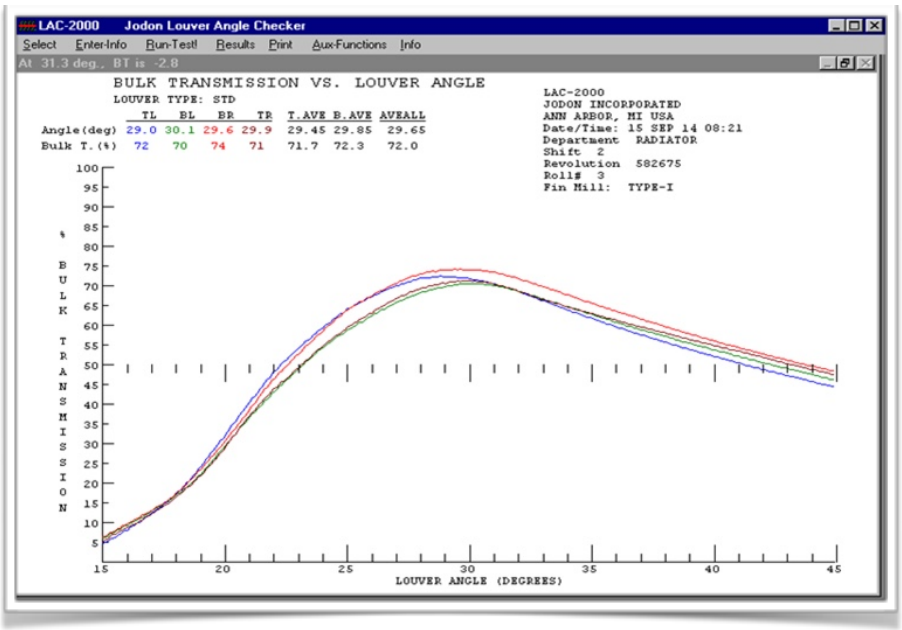



JODON

62 Enterprise Drive, Ann Arbor, Michigan 48103 USA. Phone: +1(734) 761-4044

Email: info@jodon.com Visit Online: www.jodon.com. Fax: +1(734) 761-3322

**JODON INCORPORATED**
62 Enterprise Dr. Ann Arbor, Michigan 48103 USA
Phone: (734) 761-4044 Fax: (734) 761-3322 www.jodon.com

# LAC-2000 FIXTURE AND CALIBRATION BLOCKS

The Jodon Louver Angle Measurement System (Model LAC-2000) is an industry standard for off-line measurement of convoluted fin louver angle, and bulk light transmission (BT). It has been a mainstay gauge for the automotive heat exchanger industry since 1979.

The LAC-2000 must not only produce accurate and highly repeatable results, but it must accommodate a wide variety of fin sizes and shapes. The system has been used to measure fin panels as small as 12mm in width; and as wide as 110mm's. Accommodation of such a wide range of sample sizes is achieved through the use of fixtures and calibration blocks designed to configure the system to match the customer's fin design.

## FIXTURE

Jodon carefully designs a fixture in accordance with fin drawings furnished by the customer. It must be designed so the convoluted fin sample will fit precisely in the fixture, without distortion, and so it blocks all stray light. Only light passing through the louver openings of the individual windows are used to determine the louver angle, and the companion "Bulk Transmission" values. All other light paths represent stray light and must be eliminated by the fixture. The standard fixture height is 1.6" (40.64mm), but when the fin height of the sample is greater than .45" (11.43mm) , Jodon can supply 1.8" (45.72mm) or 2.9" (73.66mm) high fixtures as necessary.

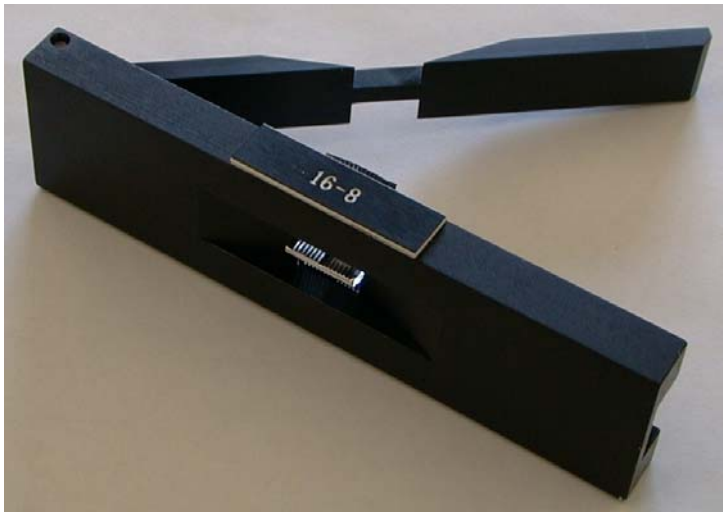

Standard LAC-2000 Fixture

## CALIBRATION BLOCK

The calibration block is used to calibrate the system to measure the bulk light transmission (BT). The design of the calibration block for a particular fin must use the information from engineering drawings. Extreme care is taken to ensure that the openings of the cal-block represent the light opening through all of the louvers of a given "louver window", and that both windows are of the same area. They must also be located on the cal-block panel in the same horizontal plane(s) as the light, which will pass through the fin sample openings.

LAC-2000 Calibration Block

## MASK

The LAC-2000 is designed to measure the louver angle, and BT values from a maximum of 4 windows in 2 adjacent fins of the convolution. If the fins have more than 2 windows each (e.g., 3-row, 4-row, etc.) the testing of the fin will have to be divided into more than one test. Jodon uses a "mask" to blank-off the unwanted windows during a specific test. After the test is complete, a different "mask" is used to blank-off the unwanted windows during the subsequent test (e.g., the "inner panel tests").

Masks are fabricated from stainless steel, and shaped to fit over the appropriate features of the fin without distorting it, and without blocking any other feature. The mask is designed to fit closely with the fixture, and to be easily affixed or removed from the fixture. When more than one mask is used for the testing of a given fin, each mask fits the fixture in exactly the same way.


LAC-2000 fixture with inner mask mounted, and outer mask to the side

The height of the fixture is determined by the sample fin height. 2.9" fixtures can only be used on LAC-2000 systems supplied with Large Manipulators.

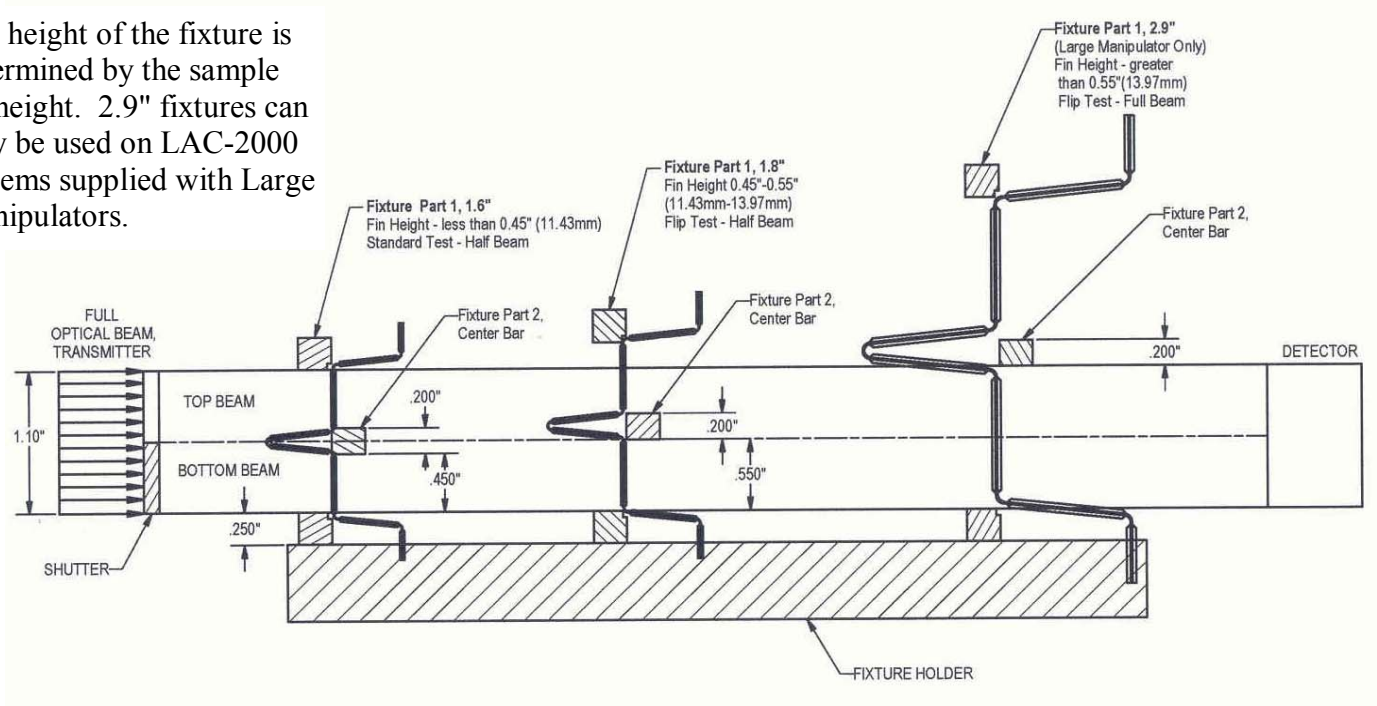


## ORDERING INFORMATION

When ordering a new fixture set, Jodon needs an engineering drawing and convoluted fin sample.


**JODON INCORPORATED**

**62 Enterprise Dr. Ann Arbor, Michigan 48103 USA**
**Phone: (734) 761-4044 Fax: (734) 761-3322 www.jodon.com**